BRUCONTROL

Process Automation Made Personal

Model UU-1-E
ESP32 UniShield
(Base board v1-1 & Riser board v1-1. Updated April 2, 2022)

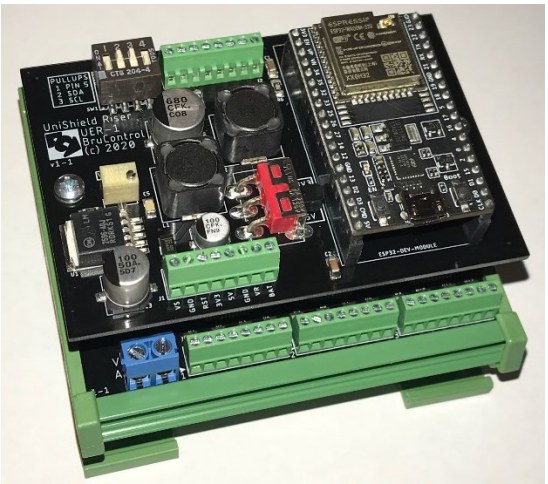

Description

This is a shield for ESP32 Development Board format interface designed by Espressif and produced by different manufacturers. It is a stacked design, containing a “Base” board for I/O and a “Riser” board for the interface. The ESP32 Development board (included) plugs on top of the riser board and can easily be replaced. The riser and base boards are connected by ribbon cable for efficient packaging.

It contains an on-board 3-amp DC:DC power supply (DDPS) to reduce the need for multiple power supplies in the control panel. The DDPS can be powered with 12 or 24 VDC and its output is adjustable from 3 to 12 VDC. Its output can be switched to either supply the interface via its 5V pin or supply the inteface with 3.3V directly (thereby bypassing the interface's 5 V regulator), or to supply an on-board terminal, creating a discrete DC-DC converter which can be used for other devices such as flow-meters, RTD-amplifiers, etc.

The base board contains 24 high-current outputs (20 are usable with the ESP32) which are split into two banks, enabling each bank to be powered by different sources (e.g. 5, 12, 24 VDC). The current outputs limits are: 3 amps per output, 5 amps per driver (4 outputs each), 15 amps per bank (2 banks). This will eliminate the need for electro-mechanical relays to switch low-current DC. Therefore, contactors, valves, relays, DC pumps can be powered directly. This should reduce panel space and simplify wiring, reducing panel size and overall cost. PWM functions at

up to 1000 Hz, enabling a DC pump without any additional hardware. The output drivers are fault tolerant - for example, will not be damaged by an accidental short-circuit.

⚠ Note: While the output drivers include a degree of fault tolerance, the interface micro-controller does not. Therefore, special attention must be paid to keep all connections to the interface within limits.

Each I/O terminal set includes a high-current driver output and a "direct" pin, allowing for devices to be connected directly to the interface pin. Fly-back diodes are included on driver outputs to damp inductive loads such as solenoids and relays to reduce potential electrical noise. Output drivers are enabled by default, but switches are included for each to disable them.

The UniShield includes on-board pull-up resistors for I2C and 1-wire, so external devices such as 1-wire temperature sensors can be easily wired. The unit is housed in a DIN carrier for easy and universal mounting. The UniShield comes assembled and tested with an ESP32 interface and pre-loaded firmware. Choices include internal (on-board) or external antenna. The assembly is 92 x 87 x 58 mm (L x W x H).

Specifications

Digital Input/Output (I/O) terminals: 24
High Current Driver Outputs: 24 (20 are accessible in current ESP32 implementation)
Terminals per Digital I/O: 2 (Direct Pin, Driver Output)
Driver Output Banks: 2 (VA: lower left side of shield, VB: upper left side of shield)
Driver Output Voltage Range: 5 – 24 VDC
Driver Output current maximums:

- 3 A per individual output
- 5 A per driver terminal group (4 outputs per driver)
- 15 A per bank (VA or VB)

VA / VB Power Terminals wire size: 14 – 22 AWG
I/O Terminals wire size: 20 – 30 AWG
DC:DC Power Supply: Input: 9 – 24 VDC, output: 3 – 12 VDC @ 3 amp
Additional terminals: Ground x 4, VS, RST, 3v3, 5V, VR, SCL/SCA (I2C), MOSI/MISO/CLK (SPI)
Assembly dimensions: is 92 x 87 x 58 mm (3 $^{5}/_{8}$ x 3 $^{7}/_{16}$ x 2 $^{5}/_{16}$ inches) L x W x H.

Models

The following MEGA UniShield models are available:

MODEL	INTERFACE	Wi-Fi Antenna
UU-1-EW	ESP32 Development Board	Internal
UU-1-EX	ESP32 Development Board	External

Product Notes

The ESP32 UniShield will accommodate any compatible ESP32 Development Board. The interface is mounted in a header pair (2 row @ 1000 mil x 19 pins @ 100 mil) on the Riser board and can be replaced or upgraded if needed.

ESP32 UniShields with internal Wi-Fi antenna interfaces should be mounted in plastic enclosures to ensure adequate signal strength and communication externally. If mounting in a metal enclosure, external antenna model should be used.

⚠ Note: For UniShields with Wi-FI shields and external antennas, never power the UniShield or connect its Interface Microcontroller to USB without first connecting the external antenna cable and antenna to the shields uFL connector.

Base Board

The ESP32 UniShield Base board has two banks of I/O terminals. Each bank is powered by one pair of power terminals: VA or VB. VA is the blue screw terminal pair at the bottom of the board and VB is the pair at the top (both screws in each terminal). Banks are arranged as follows, with position determined when the printed text is oriented upright (readable) on the Base board:

BANK / POWER TERMINAL	TERMINAL NUMBERS (oriented by printed text)
VA	1, 2, 3 (bottom row)
VB	4, 5, 6 (top row)

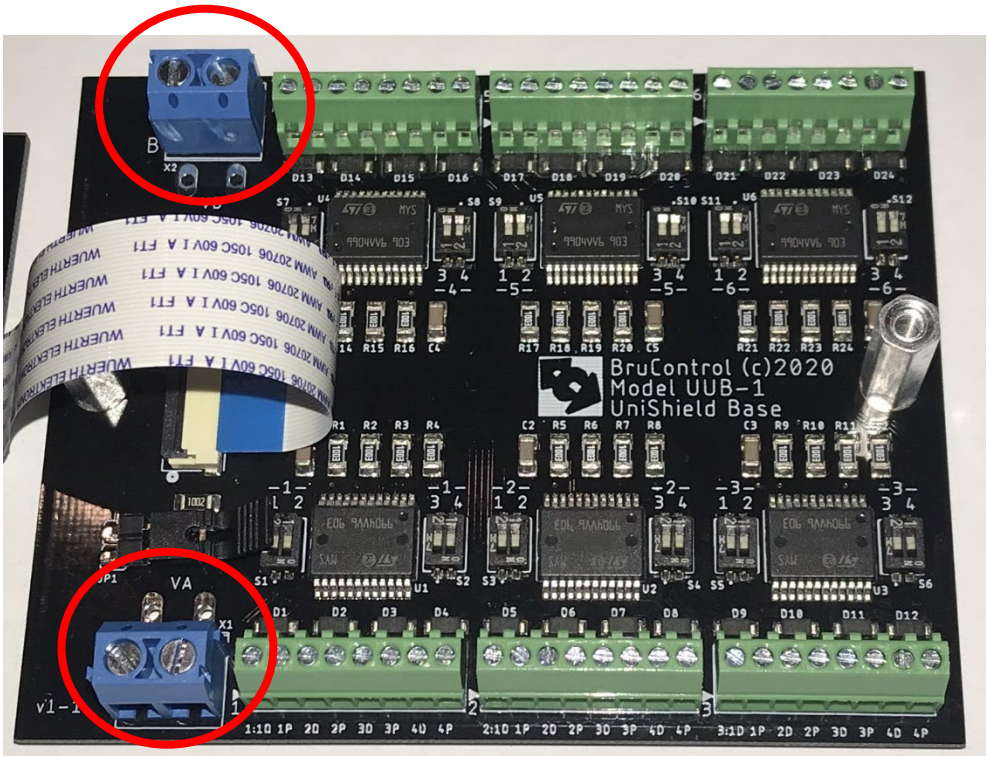

Figure 1: Power Terminals VA and VB

Each set of I/O terminals contains 8 pins. Those are divided into 4 pairs, with each pair are types: “direct pin” (P) and “driver output” (D). These are labeled in terminal:direct|driver format. For example: 2:3D, which indicates the driver output third I/O on the second terminal. When looking into the I/O terminals, they are always in order Driver|Pin when looking from left to right.

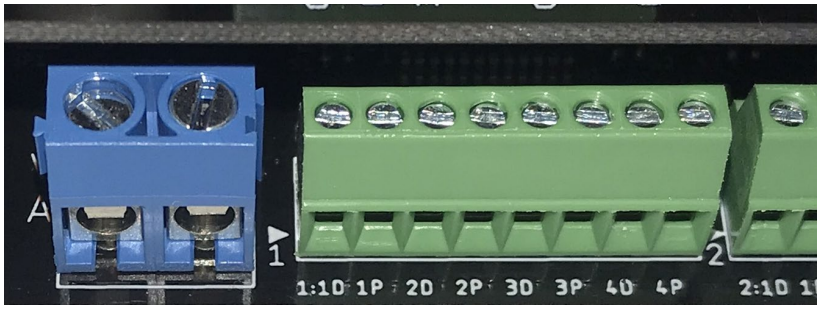

Figure 2: Power Bank VA and I/O Terminal 1 with pin|

P pins connect directly to the associated interface pin. These can be used for low-current outputs, inputs, 1-wire sensors, etc. just as if the wiring were being directly connected to the interface microcontroller at its pin/port location. When used as an output, the current limitations for that particular interface pin must be followed (e.g. 10 mA).

⚠ Under no circumstance may a P pin receive any voltage that is higher than the interface's Vcc (operating voltage). This is 3.3VDC for the ESP32. <u>If this limit is exceeded, irreparable damage will occur to both the interface and the base board's drivers</u>.

The D pins are driven by the high-current driver chips on the board. These are automotive grade and contain protection circuitry to handle overtemperature, overcurrent, and other fault situations. The D pins will output the matching voltage associated with its VA or VB bank power input when ON, therefore only Active-High configurations can be implemented (do not use Active Low settings in BruControl Device Elements).

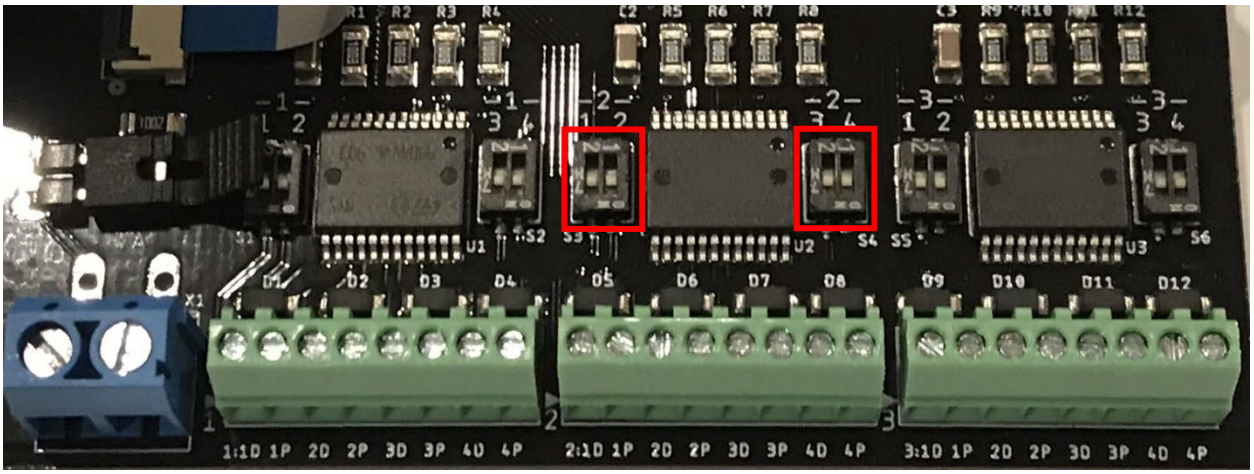

Figure 3: Terminal 2 with Driver Connect Switches for 1, 2, 3, and 4 pins

On either side of the driver chips are pairs of miniature slide switches. These switches connect the respective P pin to the driver chip input, thereby switching the driver output (D pin) in accordance with the P pin. These are defaulted in the ON position, but the user may opt to switch them OFF in cases where the driver output will not be used or where complete removal of the driver from the circuit is desired. The P pins are connected to the driver input, which is also connected to ground via a 100k ohm resistor, so this should not normally be needed, but the option exists should the P I/O pin not work as expected. Turning these switches OFF only disable the driver output terminal (D pin) – they have no effect on the P pin. The switch location is aligned with the I/O terminal block it affects and are labeled. The switch is in the ON position when the switch is pointed toward the I/O terminals, also labeled ON on the switch body. These switches are delicate and should be gently switched with an appropriate flat blade screwdriver. All switches are shipped ON (closed) as their default state.

Figure 4 below depicts how the interface, slide switch, drivers, P and D pins are interconnected.

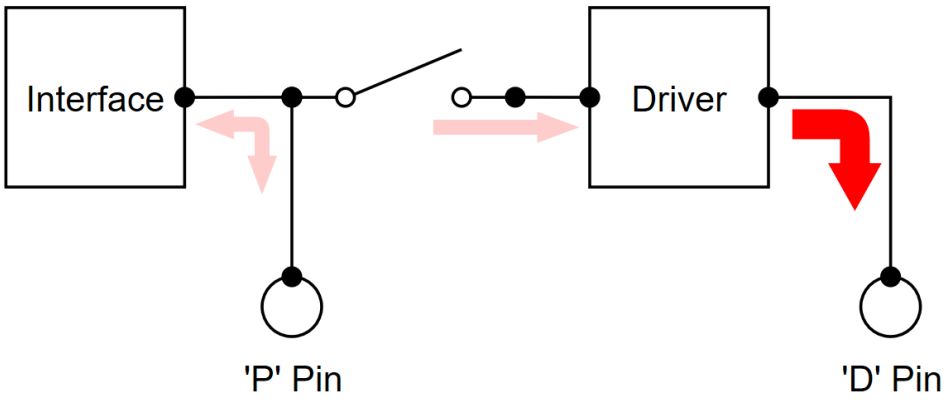

Figure 4: P and D pin connections

⚠ Because both P and D pins are connected to the same microcontroller pin/port, they must never be tied together or used concurrently. This can create an overcurrent situation which will cause irreparable damage the both the UniShield's interface and base board drivers. Wire to either the D pin (for high current outputs from the UniShield) OR the P pin (for low voltage inputs to the UniShield) – but not both! As noted above, never apply any voltage higher than the interface's Vcc to the P pins (e.g. 3.3V for the ESP32).

A jumper pin on the Base board connects Power terminal VA to the VS (input power) pin on the Riser board (see below). This saves the system installer from needing to wire a line from the power supply for interface power. In order to enable this connection, the included jumper should be installed across both pins. Prior to April 1, 2022, this jumper was installed by default. After April 1, 2022, this jumper is placed on one jumper pin only, therefore leaving this power connection disabled.

In order to change the jumper location, carefully use a pair of tweezers or needle-nose pliers to gently slide the jumper off the pin(s), then replace it on the desired pins.

⚠ DO NOT wire VS without first removing the jumper. Doing so can create an opportunity for both VS and VA to be accidentally powered with different voltages, which will damage the board(s). In addition, DO NOT wire VS without wiring VA when the jumper is in place, otherwise the connection between the riser and base can be overloaded with current for the VA bank driver outputs, which will damage the board(s).

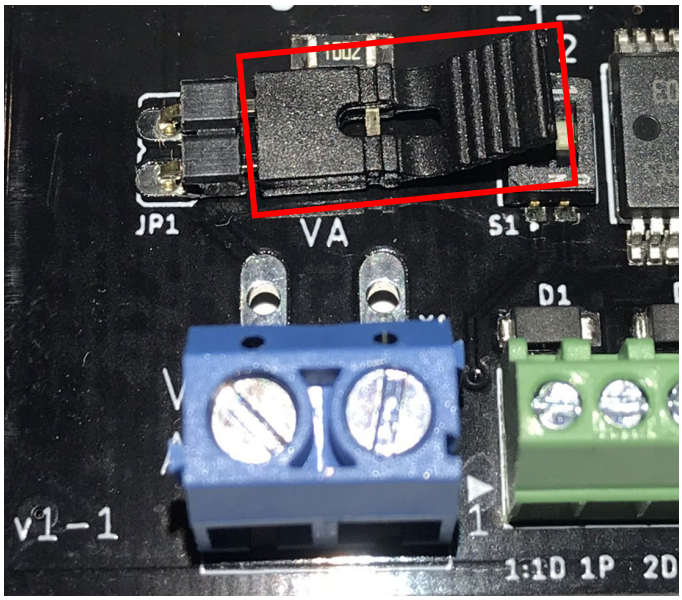

Figure 5: VA:VS power jumper

Riser Board

The ESP32 UniShield Riser board contains the interface mount, terminals for system integration, a DC:DC Power Supply, a Power Supply Switch and adjustment for power configuration, and a configuration switch set. It contains ESP32 Development Board format headers to mount a compatible interface microcontroller (included).

The Power Supply Terminal is on the lower left of the Riser board. The terminal pins are VS, GND, RST, 3V3, 5V, VR, and BAT.

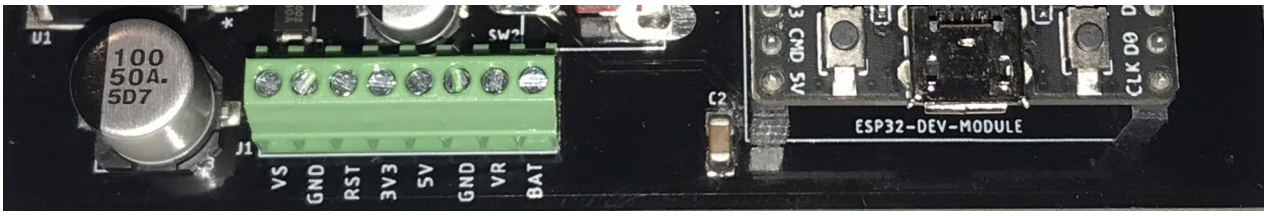

Figure 6: Riser Board Power Supply Terminal

The voltage adjustment potentiometer for the on-board DC:DC Power Supply is on the middle left of the Riser board.

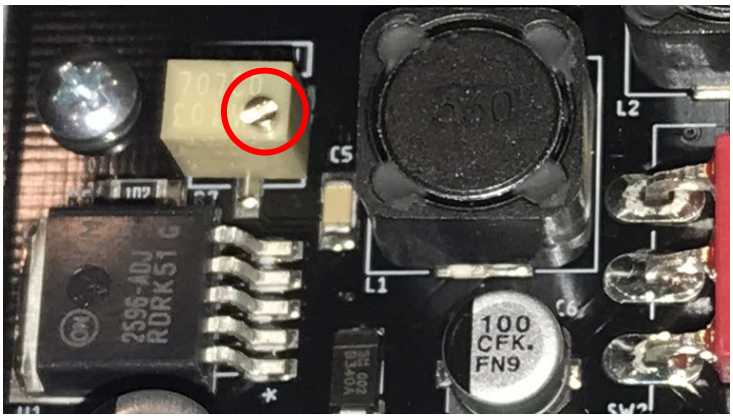

Figure 7: Riser Board DC:DC Power Supply Voltage Adjustment

On the middle of the Riser board is the DC:DC Power Supply power switch.

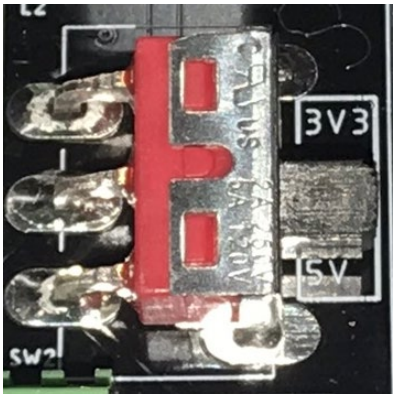

Figure 8: Riser Board DC:DC Power Supply Power Switch

The serial communications terminal is on the upper edge of the Riser board.

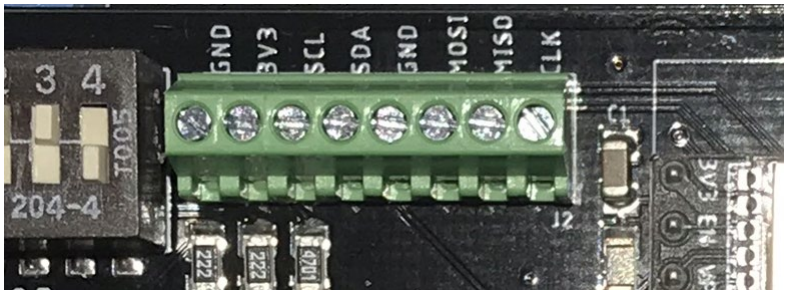

Figure 9: Serial Communications terminal

On the middle of the Riser board is the UniShield function switch set.

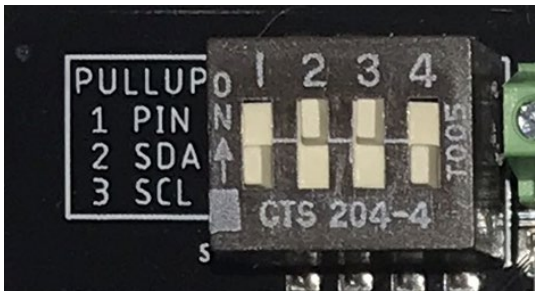

Figure 10: UniShield Function Switch Set

Configuration

⚠ THE UNISHIELD HAS THREE ITEMS WHICH MUST BE CONFIGURED PRIOR TO USE:

1. DC:DC Power Supply (DDPS) output
2. UniShield functions
3. Base board I/O driver switches

DC:DC Power Supply

The input of the on-board DDPS is Riser board Power Supply terminal pin VS (VA if the VA:VS power jumper is installed). The output of this power supply is pin VR. The voltage on pin VR is set by the DDPS voltage adjustment potentiometer, labeled "VR ADJ" (see Figure 7). The 3-position Power Switch (labeled SW2) has 3 locations which determine where the output power of the DDPS is directed (see Figure 8):

POWER SWITCH POSITION	POWER SUPPLY FUNCTION
VR → 5V	Directs the DDPS output to the 5V pin of the interface. This will power the interface in such a way that the interface's internal regulator will further regulate power for the interface's use. The DDPS voltage should be set at 5V when using this location. The VR pin on the Riser Board Power Supply terminal will also present 5V this voltage. This is the default position and setting during manufacture.
VR	Directs the DDPS output to the Riser Board Power Supply terminal VR pin only. The interface will not receive any power from the Riser board and will need to be powered externally. This can be user to power devices other than the interface. <u>NOTE: THIS IS THE DC:DC POWER SUPPLY VOLTAGE SETTING POSITION.</u>
VR → 3V3	Directs the DDPS output to the 3V3 pin of the interface. This will power the interface such that it will NOT use its internal 5V regulator. This may prevent overheating of the interface regulator in circumstances where high voltage and current are required by the interface. NOTE The DDPS voltage MUST BE

	SET TO 3.3V when using this location – any higher may damage the interface. The VR terminal on the Riser Board will also contain this voltage.

⚠ Configure the DDPS with the POWER SWITCH IN THE VR POSITION ONLY. With the VS (or VA if the VA:VS power jumper is installed) and GND pins properly wired per "Installation" below and the Power Switch in the VR position, apply power to the Riser board. Apply a Volt-Ohm Meter's (VOM) leads to VR and GND and read the voltage of the DDPS output. Adjust the "VR ADJ" potentiometer using a micro flat blade screwdriver. Clockwise will increase the voltage, and counterclockwise will decrease it. If planning to use the VR → 5V Power Switch position, adjust the voltage to 5.0V exactly. If using the VR → 3V3 location, adjust the voltage to be 3.3V exactly. If using the VR position (i.e. to power devices other than the interface), adjust the voltage as required. DO NOT MOVE THE POWER SWITCH TO THE 5V or 3V3 positions if either exceeds 5V or 3.3V voltages, respectfully. Once the appropriate voltage is set, move the Power Switch to the planned position.

UniShield Functions

The Riser board contains a 4-position slide switch set to control different functions of the UniShield (see Figure 10). The switches enable the following functions:

SWITCH LOCATION	ENABLE FUNCTION	DESCRIPTION
1	PIN 5 PULLUP	Ties pin 5 to a 4.7k ohm pull-up resistor. This is provided to facilitate connection to 1-wire devices to prevent the need for an external pull-up resistor.
2	SDA PULLUP	Ties the microcontroller SDA (I2C data) pin to a 2.2k ohm pull-up resistor. This is provided for connection to I2C devices which do not have internal pull-up resistors.
3	SCL PULLUP	Ties the microcontroller SCA (I2C clock) pin to a 2.2k ohm pull-up resistor. This is provided for connection to I2C devices which do not have internal pull-up resistors.
4	N/A	Not applicable / no connection. Included for potential future use.

The switches will be set during manufacturing; however, the defaults are as follows:

SWITCH LOCATION	DEFAULT POSITION: NO COMMUNICATION SHIELD
1	OFF
2	ON

3	ON
4	OFF

If configuring the UniShield for connection to 1-wire devices, switch 1 will need to be changed to ON.

Base Board Switches

As noted above, the Base board contains a slide switch for each I/O pin. Follow the steps above if any of these switches need to be updated in order to disconnect the I/O pins (P) from their respective drivers (D).

ESP32 Pin Considerations

Certain ESP32 GPIO pins have dedicated functions and need be considered when wiring the UniShield according to the Interface Wiring Map:

1. GPIO 0: ESP32 outputs brief PWM signal during power-up.
2. GPIO 2: Some ESP32 boards have this pin tied to the onboard LED.
3. GPIO 5: ESP32 outputs brief PWM signal during power-up.
4. GPIO 12: ESP32 will not boot if this pin is pulled high during power-up.

Installation

⚠ The system builder is responsible for proper design, integration, wiring, and configuration. BruControl will not assume any liability for the builder's failure to meet the UniShield's specifications and operating parameters.

Mount shield assembly to DIN rail base by locating upper track on the rail and snap lower down. Care must be taken to provide adequate ventilation in the control enclosure such that the heat generated by the driver chips can be transferred away from the board. Care also must be taken to prevent any contact to board circuitry by external wires, tools, or equipment. Good installation practice dictates that low voltage devices such as microcontrollers be isolated and shielded from high voltage devices and equipment. Perform all wiring with the power disconnected. Ensure all power supplies are of high quality (switching type with appropriate protections and filtering).

Using appropriate wire size for current loads, wire the Base board's blue power terminals: 5V to 24 VDC for each bank VA or VB. Do not daisy chain wires unless assurance is made that net current requirements are not approached. Wire each I/O pin according to the device/sensor being connected. Inputs to the interface should be connected to P pins and high current, high voltage driver outputs from the interface should be connected to D pins. Consult the interface's respective Interface Wiring Map to determine which I/O pin applies to which BruControl pin/port combination.

Using appropriate wire size for current loads, wire the Riser board's green terminal pins per the chart below (see Figures 6, 9):

RISER TERMINAL PIN	DESCRIPTION
VS	DC:DC power supply input, 7 – 24 VDC. 3A maximum input current.
GND	Ground. Wire all grounds in a STAR pattern (to a singular point).
RST	Interface reset. Momentarily ground this line to reset the interface.
3V3	3.3V output of the interface's 3.3V regulator.
5V	5V when set Power Switch Position is set to 5V.
SCL	I2C bus clock signal.
SDA	I2C bus data signal.
CLK	SPI bus clock signal.
MISO	SPI bus Master In Slave Out signal (ties to slave SDO pins).
MOSI	SPI bus Master Out Slave In signal (ties to slave SDI pins).

Assembly

The MEGA UniShield comes assembled, however should an interface need to be exchanged, it may be disassembled. In addition, if disconnection of a particular Base board I/O P pin from the driver input is desired, the following steps may be followed. NOTE: The components of the UniShield are delicate and must be handled accordingly. In addition, electronics are sensitive to electrostatic discharge, so ensure the operator is grounded before handling the assembly.

1. Remove the UniShield from its assembly and perform these steps on a static-free worktable. Do not attempt to perform this operation with the UniShield mounted in its control enclosure.
2. With the UniShield upright on the worktable, remove the 2x Phillips head screws on either side of the Riser board (see Figure 10). Do not let the Riser board move until both screws have been removed.
3. Rotate the UniShield so that the base carrier sits on its right side. Gently rotate the Riser board 90 degrees to the right so it is facing flat and upside down on the worktable (see Figure 11). Note the Riser and Base boards are connected by a ribbon cable. <u>This cable is delicate and must not have any tension placed on it.</u>
4. The Base board slide switches are now fully exposed and may be changed. Use a small flat blade screwdriver to gently change any particular I/O pin-driver connection switch (see Figure 3).
5. Rotate the Riser board to the left 90 degrees, aligning the two screw holes, then rotate the assembly to the left and replace the Philips-head screws.
6. Test the UniShield assembly on a test bench before reassembling into its control enclosure.

Contact BruControl at info@brucontrol.com with any questions or concerns.